Rexroth
Bosch Group

Secondary control with A4VSO axial piston units

RE 92057/12.12

Type A4VSO...DS2

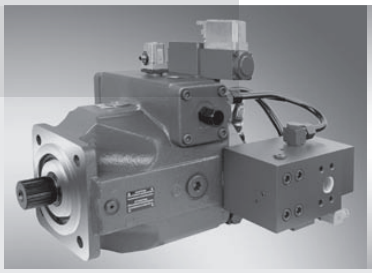

Secondary unit
type A4VSO125DS2R

Digital controller assembly
SYHNC100-SEK...3X
(not included in the scope of delivery)

Size 40...1000
Component series 1X, 3X
Nominal pressure 315 bar
Peak pressure 400 bar

Table of contents

Features	1
Ordering code	2
Function	4
Parts of the secondary unit	4
Technical data	5
Device dimensions / circuit diagram	8
Closed-loop speed control DS2R	26
Incremental encoder GEL 293	27
Swivel angle sensor AWXF	28
Electrically releasable check valve RVE A4VS	29
Anti-cavitation valve S...A	29
Digital controller assembly SYHNC100-SEK-...-3X	30

Features

- Highly dynamic rotor drive
- Motor and generator operation for both directions of rotation
- With energy recovery and energy storage
- With closed-loop speed, position or torque control with high control quality and dynamics
- Throttle-free coupling and energy transfer from any number of independently working axial piston units (motor or generator operation) to one joint supply line with constant operating pressure
- Compact digital control electronics

Ordering code

	A4VSO				/		W	–				25			
01	02	03	04	05		06	07		08	09	10	11	12	13	14

Hydraulic fluid

01	Mineral oil	

Axial piston unit

02	Swash plate design, adjustable, p_N = 315 bar, p_{max} = 400 bar	**A4VSO**

	Size	**40**	**71**	**125**	**180**	**250**	**355**	**500**	**750**	**1000**
03	Displacement $V_{g\,max}$ [cm³]	40	71	125	180	250	355	500	750	1000

Control and adjustment device

04	Closed-loop speed control, secondary controlled, with attached high-response valve	**DS2R**
	Closed-loop speed control, secondary controlled, with attached servo valve [1]	**DS2S**
	Closed-loop speed control, secondary controlled, without valve	**DS2E**

Load holding function

05	With load holding valve LS 1363 [1]	**L**
	Without load holding valve	**0**

Component series

06	Size 40 and size 71	**1X**
	Size 125 to size 1000	**3X**

Direction of rotation

07	Changing	**W**

Seals

08	NBR (nitrile rubber according to ISO 1629) with shaft seal ring made of FKM	**P**
	FKM (fluorocarbon rubber according to ISO 1629)	**V**

Shaft end

09	Cylindrical with fitting key, DIN 6886	**P**
	Splined shaft profile, DIN 5480	**Z**

	Mounting flange	40	71	125	180	250	355	500	750	1000	
10	ISO 4-hole	●	●	●	●	●	●	–	–	–	**B**
	ISO 8-hole	–	–	–	–	–	–	●	●	●	**H**

Connection for working lines

11	Ports B and S: SAE, laterally displaced by 90°, metric mounting thread, the additional pressure port B1 vis-à-vis B is closed upon delivery by means of a flange plate.	**25**

● = Available

– = Not available

[1] No standard, please contact us at the following email address: application-centre@boschrexroth.de

	A4VSO				/		W	–				25			
01	02	03	04	05		06	07		08	09	10	11	12	13	14

	Through-drive			40	71	125	180	250	355	500	750	1000	
12	Without boost pump, without through-drive			●	●	●	●	●	●	●	●	●	**N00**
	Through-drive K or U for attaching an axial piston unit			●	●	–	–	–	–	●	●	●	**K...**
				–	–	●	●	●	●	–	–	–	**U...**
	Flange	Splined shaft	For attaching										
	ISO 125, 4-hole	32x2x14x9g	A4VSO40	●	●	●	●	●	●	●	●	●	**...31**
	ISO 140, 4-hole	40x2x18x9g	A4VSO71	–	●	●	●	●	●	●	●	●	**...33**
	ISO 160, 4-hole	50x2x24x9g	A4VSO125	–	–	●	●	●	●	●	●	●	**...34**
	ISO 160, 4-hole	50x2x24x9g	A4VSO180	–	–	–	●	●	●	●	●	●	**...34**
	ISO 224, 4-hole	60x2x28x9g	A4VSO250	–	–	–	–	●	●	●	●	●	**...35**
	ISO 224, 4-hole	70x3x22x9g	A4VSO355	–	–	–	–	–	●	●	●	●	**...77**
	ISO 315, 8-hole	80x2x38x9g	A4VSO500	–	–	–	–	–	–	●	●	●	**...43**
	ISO 400, 8-hole	90x3x28x9g	A4VSO750	–	–	–	–	–	–	–	●	●	**...76**
	ISO 250, 8-hole	90x3x28x9g	A4VSO1000	–	–	–	–	–	–	–	–	●	**...88**
	With attached incremental encoder 1000 imp/r			●	●	●	●	●	●	●	●	●	**T03**
	With attached incremental encoder 2500 imp/r			●	●	●	●	●	●	●	●	●	**T04**
	Incremental encoder can be attached, through-drive closed with cover			●	●	●	●	●	●	●	●	●	**T10**
	Special speedometer attachment			●	●	●	●	●	●	●	●	●	**T99**
	Euro flange, through-drive closed			●	●	●	●	●	●	●	●	●	**T00**

Valves

13	Without valve block	**0**
	Electrically releasable check valve RVE attached	**1**
	Electrically releasable shut-off block for combination with load holding valve LS1363 (ordering code 05 = "L") [1]	**2**

Filtration

14	Without filter	**N**
	With attached sandwich plate filter (Only in connection with ordering code 04 = "DS2S")	**Z**

● = Available

– = Not available

[1] No standard, please contact us at the following email address: application-centre@boschrexroth.de

Related electronics (separate order)

See page 30

Function

The secondary control is an energy-saving drive concept with high dynamics for setting up closed-loop speed, position or torque controls with energy recovery.

The secondary controlled hydrostatic axial piston units work at one supply network with constant pressure.

The power removal or return from or to the supply network is throttle-free and in line with the demand by adjusting the stroke volume of the axial piston units to the relevant load case.

To this end, any number of units working as motor or pump can be connected in parallel. Four-quadrant operation is possible whereas the units for speed or torque reversal are swiveled via "zero". This also reverts the direction of flow.

Between primary and secondary units, an energy store can be arranged, if necessary.

The store is used to cover flow peaks. It is moreover used to store the energy which is fed back by the secondary unit into the hydraulic network in case of pump operation if there are no more actuators. Together with the pressure-controlled primary unit and the operating state of the secondary unit, the charging state of the store and its preload pressure determine the constant high pressure of the system.

The specific properties of the secondary control such as the reduction of the number of devices needed in the primary area, the possibilities to recover energy and store braking energy and the almost load-independent speed and positioning accuracy open up a broad range of application.

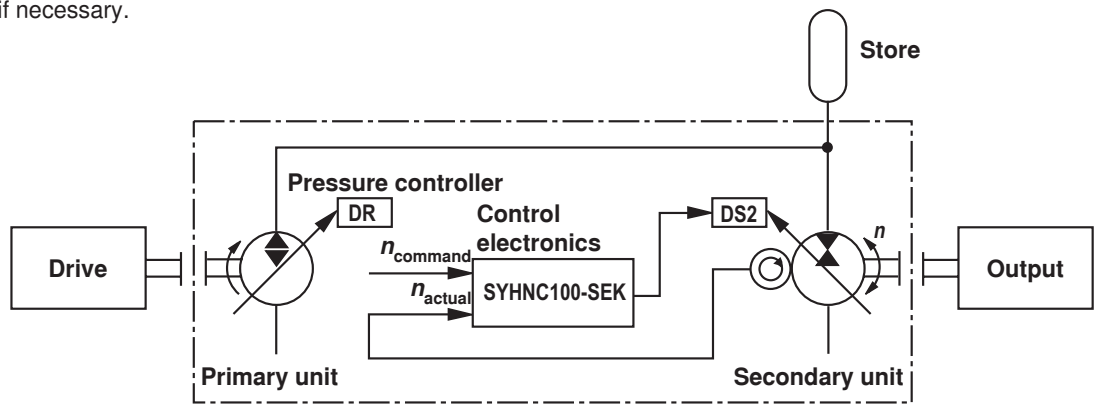

Parts of the secondary unit

1 Axial piston unit A4VSO

1.1 4-way high-response valve (see data sheet 29026)

Size of the A4VS	**Type**
40, 71	4WRPH 6 C3 B24L-2X/G24K0/M-750
125 to 1000	4WRPH 10 C3 B50L-2X/G24K0/M-750

1.2 Swivel angle sensor AWXF (see page 28)

1.3 Incremental encoder GEL 293
(ordering code 12 = "T03" and/or "T04") (see page 27)

2 Electrically releasable check valve RVE
(ordering code 13 = "1") (see page 29)

3 Anti-cavitation valve, separate order (see page 29)

Related electronics (for more information refer to page 30)**:**

– Digital controller assembly SYHNC100-SEK-...-3X

– Amplifier VT-VRRA 1-527-20/V0
(for A4VS sizes 40 and 71)
Amplifier VT-VRRA 1-537-20/V0
(for A4VS sizes 125 to 1000)

– Card holder VT3002-1-2X/32F

Hydraulic circuit diagram for standard configuration
A4VSO....DS2R/..W–...25T0...1N

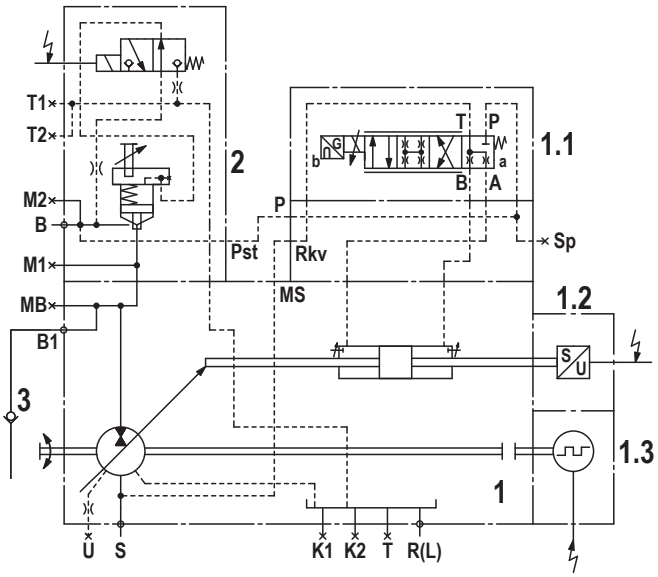

Technical data: Axial piston unit A4VSO (applies to mineral oil)

Pressures

Operating pressure range (pressure specification according to DIN 24312)

Pressure at port B	
Nominal pressure p_N [1]	315 bar
Peak pressure p_{max}	400 bar
Absolute pressure at port S (suction opening) $p_{abs\ min}$ At port S, feed-in is possible by means of a boost pump.	≥ 1 bar

Boost pressure range

Maximum boost pressure $p_{E\ max}$	30 bar
Recommended boost pressure p_E	16 bar
Boost pump inlet pressure Suction pressure $p_{S\ abs\ min}$ (v = 10 to 300 mm²/s)	≥ 0.7 bar

Pilot pressure range

Maximum admissible pilot pressure [1] p_{max}	315 bar
Minimum pilot pressure required p_{min}	Operating pressure and/or 150 bar (see diagram)

Leakage pressure

Max. leakage pressure (housing pressure) $p_{L\ abs\ max}$	4 bar

Installation position

Any. During commissioning and during operation, the housing must be filled with hydraulic fluid.

Notice:

The values in the table are guidelines. With special operating conditions, please contact us at the following email address: application-centre@boschrexroth.de.

[1] Due to the admissible data of the high-response valve and other system components

Leakage pressure

The admissible leakage pressure (housing pressure) depends on the speed.

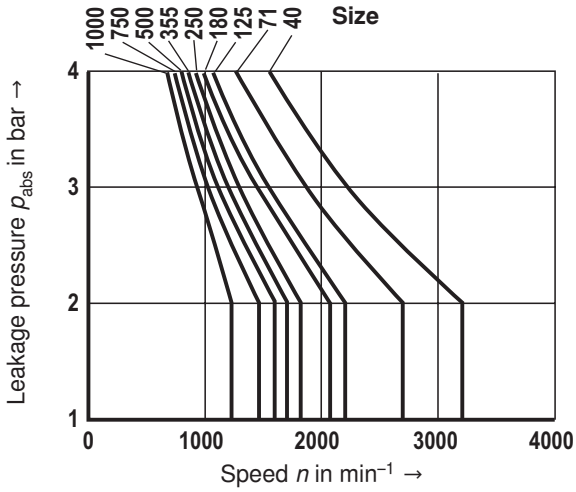

Required pilot pressure depending on the operating pressure

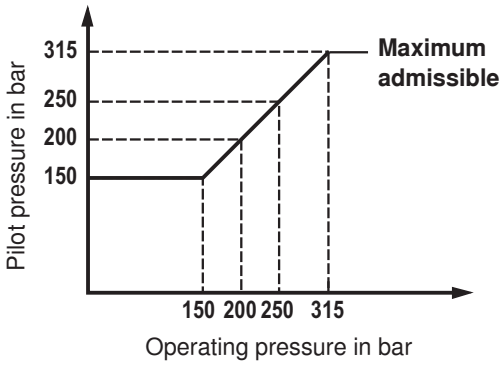

Technical data

Value table (theoretical values, without consideration of η_{mh} and η_v; values rounded)

For a highly dynamic, exact drive system, a play-free minimum mass moment of inertia direct at the shaft of the secondary unit is required. The related information can be found in the line "Required minimum total moment of inertia". Higher moments of inertia improve the control behavior.

Size		Size	**40**	**71**	**125**	**180**	**250**	**355**	**500**	**750**	**1000**
Displacement	$V_{g\,max}$	cm^3	40	71	125	180	250	355	500	750	1000
Max. speed											
$V_g \leq 1.0\ V_{g\,max}$, $p_E \geq 15$ bar	n_{max}	min^{-1}	3700	3200	2600	2400	2000	2000	1800	1600	1600
$V_g \leq 0.8\ V_{g\,max}$, $p_E \geq 15$ bar	n_{max}	min^{-1}	4900	4100	3400	2900	2600	2200	2000	1800	1600
$V_g \leq 0.8\ V_{g\,max}$, $p_E \geq 1$ bar	$n_{o\,max}$	min^{-1}	3200	2700	2200	2100	1800	1700	1600	1450	1000
$V_g \leq 1.0\ V_{g\,max}$, $p_E \geq 1$ bar	$n_{o\,max}$	min^{-1}	2600	2200	1800	1800	1500	1500	1320	1200	1000
Torque with $V_{g\,max}$ and Δp = 300 bar	T	Nm	191	339	597	859	1194	1695	2387	3581	4775
Power with $V_{g\,max}$, n_{max} and Δp = 300 bar	P	kW	74	114	163	216	250	355	450	600	800
Adjustment volume (from 0 to $V_{g\,max}$)	$V_{S\,max}$	cm^3	5.9	10.5	26.0	26.0	50.9	50.9	63.8	105	129
Actuating time (from 0 to $V_{g\,max}$)	t_S	s	0.030	0.040	0.050	0.050	0.060	0.060	0.080	0.090	0.1
Moment of inertia		kgm^2	0.0049	0.0121	0.0300	0.055	0.0959	0.19	0.3325	0.66	1.20
Required minimum total moment of inertia		kgm^2	0.025	0.06	0.15	0.27	0.48	0.95	1.66	3.33	6
Weight approx. (with RVE and incremental encoder) A4VSO...DS2	m	kg	65	79	122	136	218	241	373	513	642
Adm. axial force with housing pressure p_{max} 1 bar abs.	$\pm F_{ax\,max}$	N	1000	1400	1900	2250	3000	3600	4000	5450	8000
Adm. axial force with housing pressure p_{max} 4 bar abs.	$+F_{ax\,max}$	N	620	810	1050	1400	1850	2100	2500	3150	4700
	$-F_{ax\,max}$	N	1380	1950	2750	3050	4150	5050	5500	7800	11000
Admissible radial force	$F_{q\,max}$	N	1200	1700	2500	3100	4000	4400	5000	6000	10000

Force application

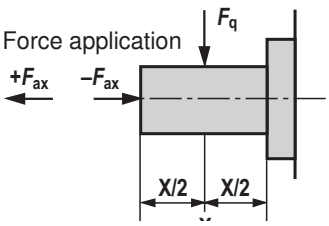

Flow direction

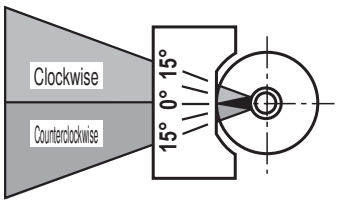

Swivel range [1]	Direction of rotation [2]		Pressure in	Operating mode
	Clockwise	Counterclockwise		
Clockwise	B → S	–	BB	Motor
Clockwise	–	S → B		Pump
Counterclockwise	–	B → S	BB	Motor
Counterclockwise	S → B	–		Pump

[1] Cf. swivel angle display
[2] Looking at the shaft

Technical parameters

Motor operation	Pump operation
Displacement	**Flow**
$q_V = \frac{V_g \cdot n}{1000 \cdot \eta_v}$ [l/min]	$q_V = \frac{V_g \cdot n \cdot \eta_v}{1000}$ [l/min]
Output torque (load torque)	**Drive torque**
$T = \frac{V_g \cdot \Delta p \cdot \eta_{mh}}{20 \cdot \pi}$ [Nm]	$T = \frac{V_g \cdot \Delta p}{20 \cdot \pi \cdot \eta_{mh}}$ [Nm]
Output power	**Drive power**
$P = \frac{2\pi \cdot T \cdot n}{60000} = \frac{T \cdot n}{9549} = \frac{q_V \cdot \Delta p \cdot \eta_t}{600}$ [kW]	$P = \frac{2\pi \cdot T \cdot n}{60000} = \frac{T \cdot n}{9549} = \frac{q_V \cdot \Delta p}{600 \cdot \eta_t}$ [kW]

V_g = Geometric displacement in cm^3 per rotation
Δp = Pressure differential in bar
n = Speed in min^{-1}
η_v = Volumetric efficiency
η_{mh} = Mechanical-hydraulic efficiency
η_t = Overall efficiency ($\eta_t = \eta_v \cdot \eta_{mh}$)

Device dimensions / circuit diagram: A4VSO40DS2R0/1XW–..B25T031N (in mm)

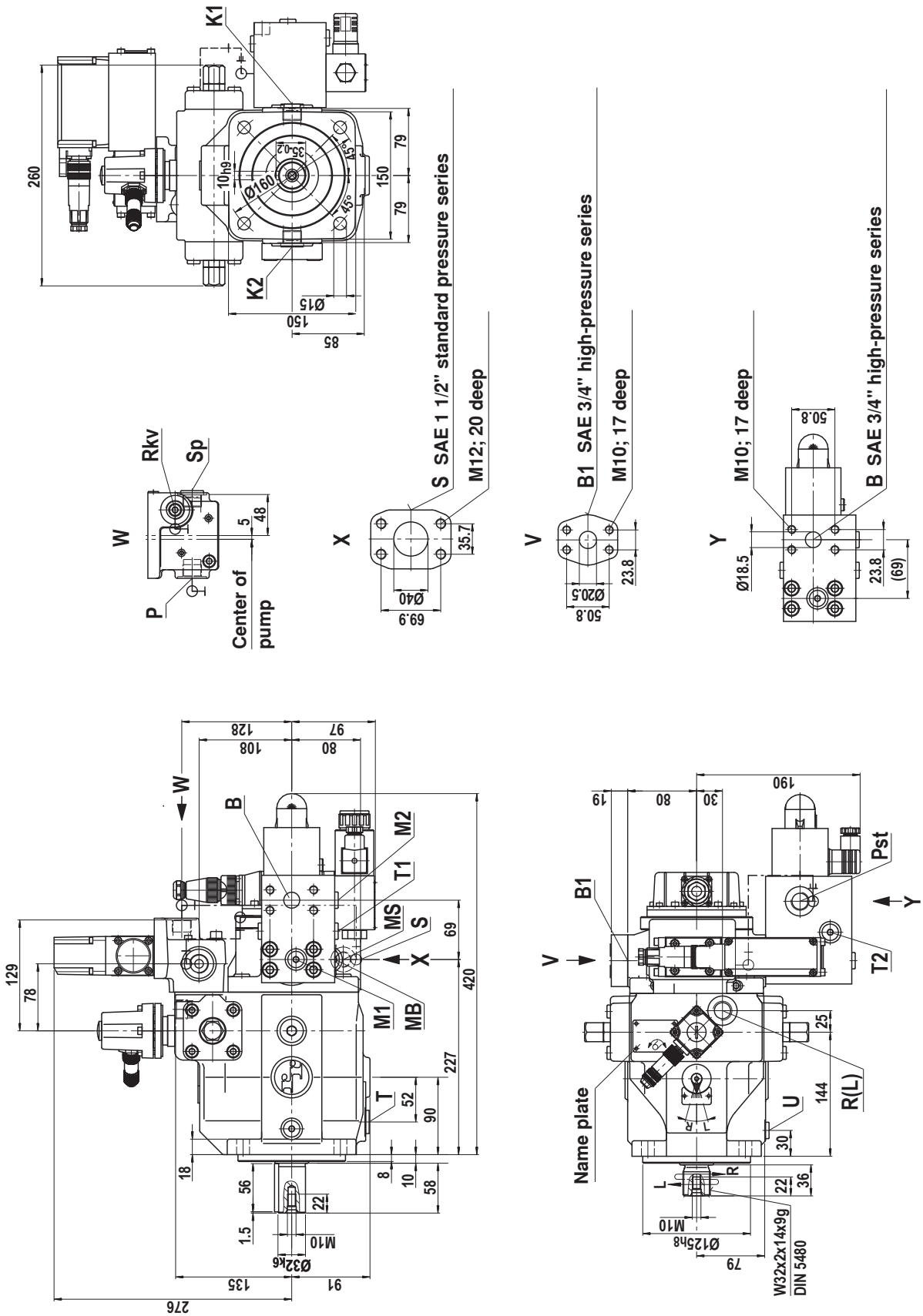

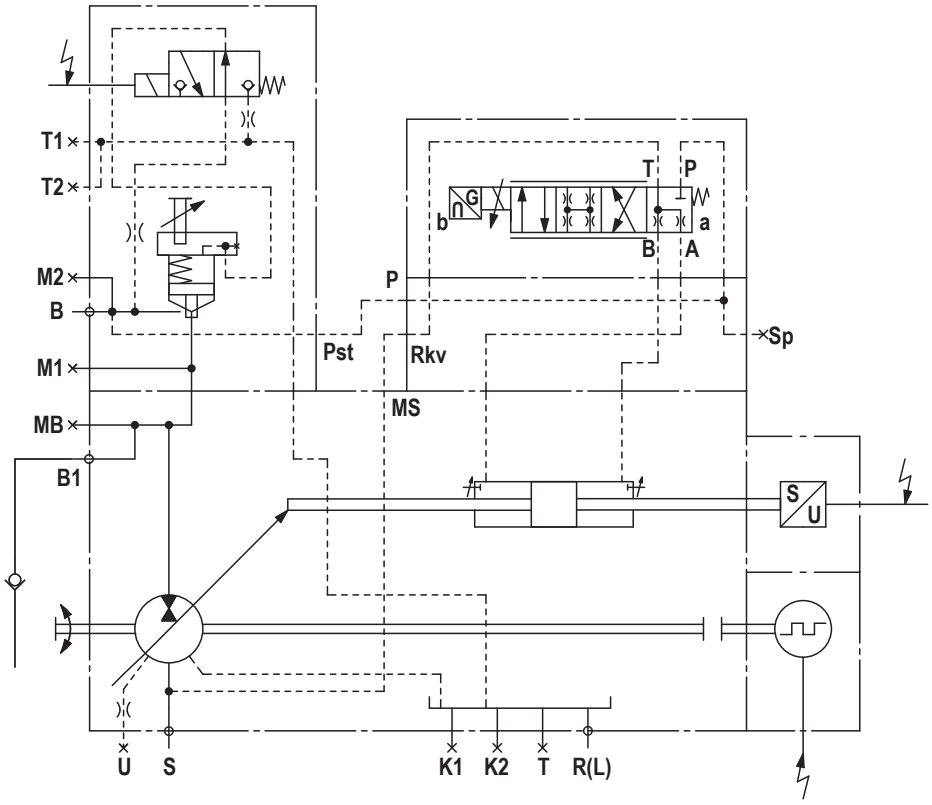

Designation of the ports

B	Pressure port	SAE 3/4"
B1	Additional pressure port	SAE 3/4"
S	Suction port	SAE 1 1/2"
K1, K2	Flushing port	M22x1.5
MB	Measuring port operating pressure	M14x1.5
M1, M2	Measuring port operating pressure	G 1/4
Sp	External control pressure port	M22x1.5
R(L)	Fluid filling and bleeding	M22x1.5
T	Fluid drain	M22x1.5
T1, T2	Leaking fluid/bleeding	G 1/4
U	Flushing port (bearing flushing)	M14x1.5
RKV	Pilot fluid return (piped)	M22x1.5
MS	Pilot fluid return (piped)	M18x1.5
P	Control pressure port (piped)	M22x1.5
Pst	Control pressure port (piped)	G 1/2

Device dimensions / circuit diagram: A4VSO71DS2R0/1XW–..B25T031N (in mm)

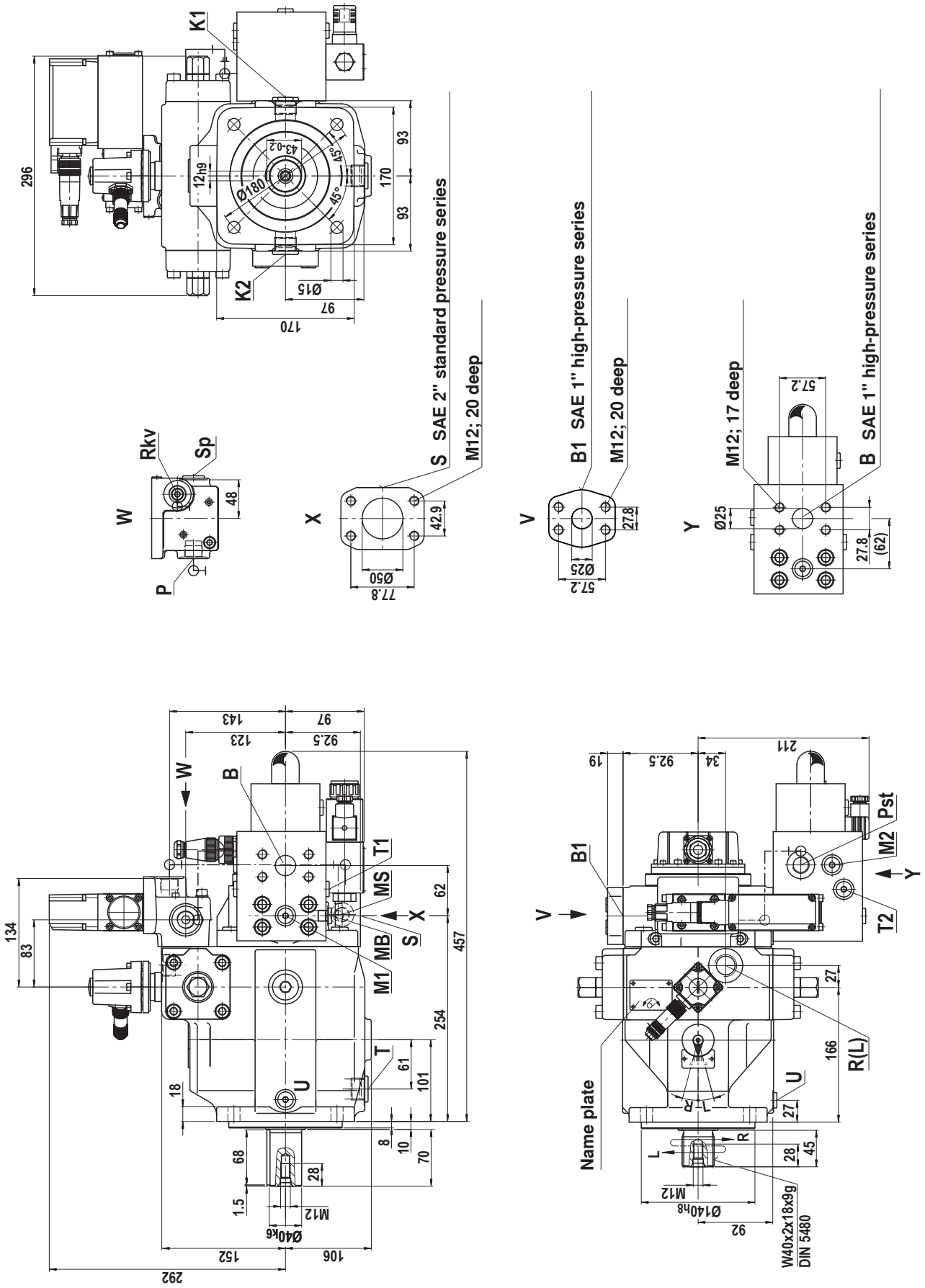

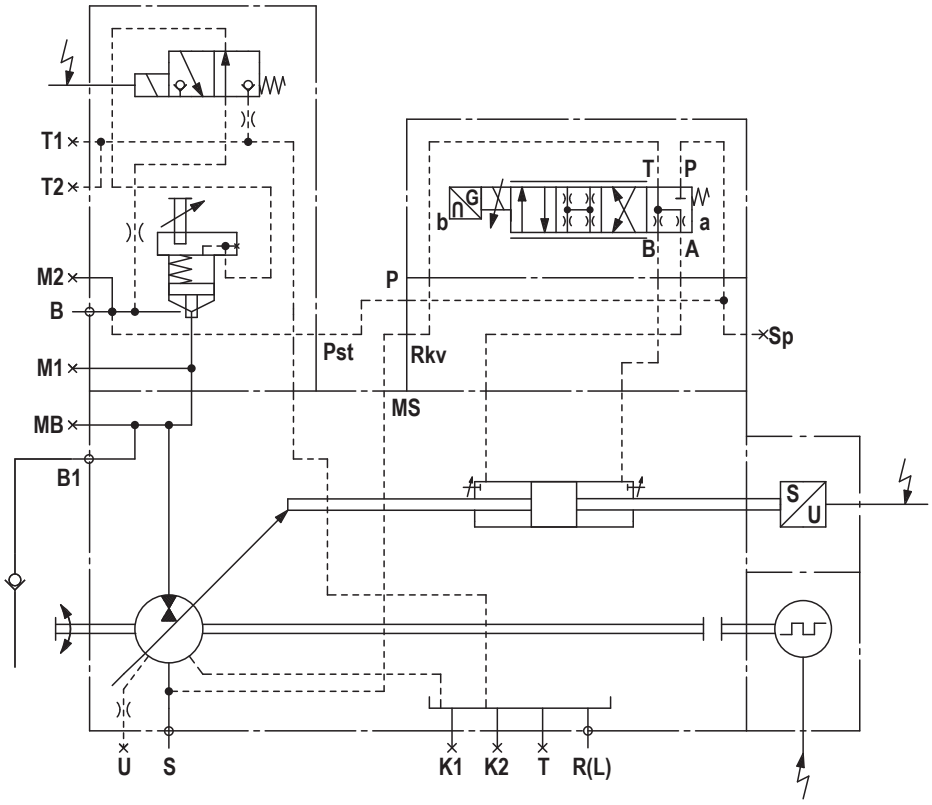

Designation of the ports

B	Pressure port	SAE 1"
B1	Additional pressure port	SAE 1"
S	Suction port	SAE 2"
K1, K2	Flushing port	M27x2
MB	Measuring port operating pressure	M14x1.5
M1, M2	Measuring port operating pressure	G 1/4
Sp	External control pressure port	M22x1.5
R(L)	Fluid filling and bleeding	M27x2
T	Fluid drain	M27x2
T1, T2	Leaking fluid/bleeding	G 1/4
U	Flushing port (bearing flushing)	M14x1.5
RKV	Pilot fluid return (piped)	M22x1.5
MS	Pilot fluid return (piped)	M18x1.5
P	Control pressure port (piped)	M22x1.5
Pst	Control pressure port (piped)	G 1/2

Device dimensions / circuit diagram: A4VSO125DS2R/3XW–..B25T031N (in mm)

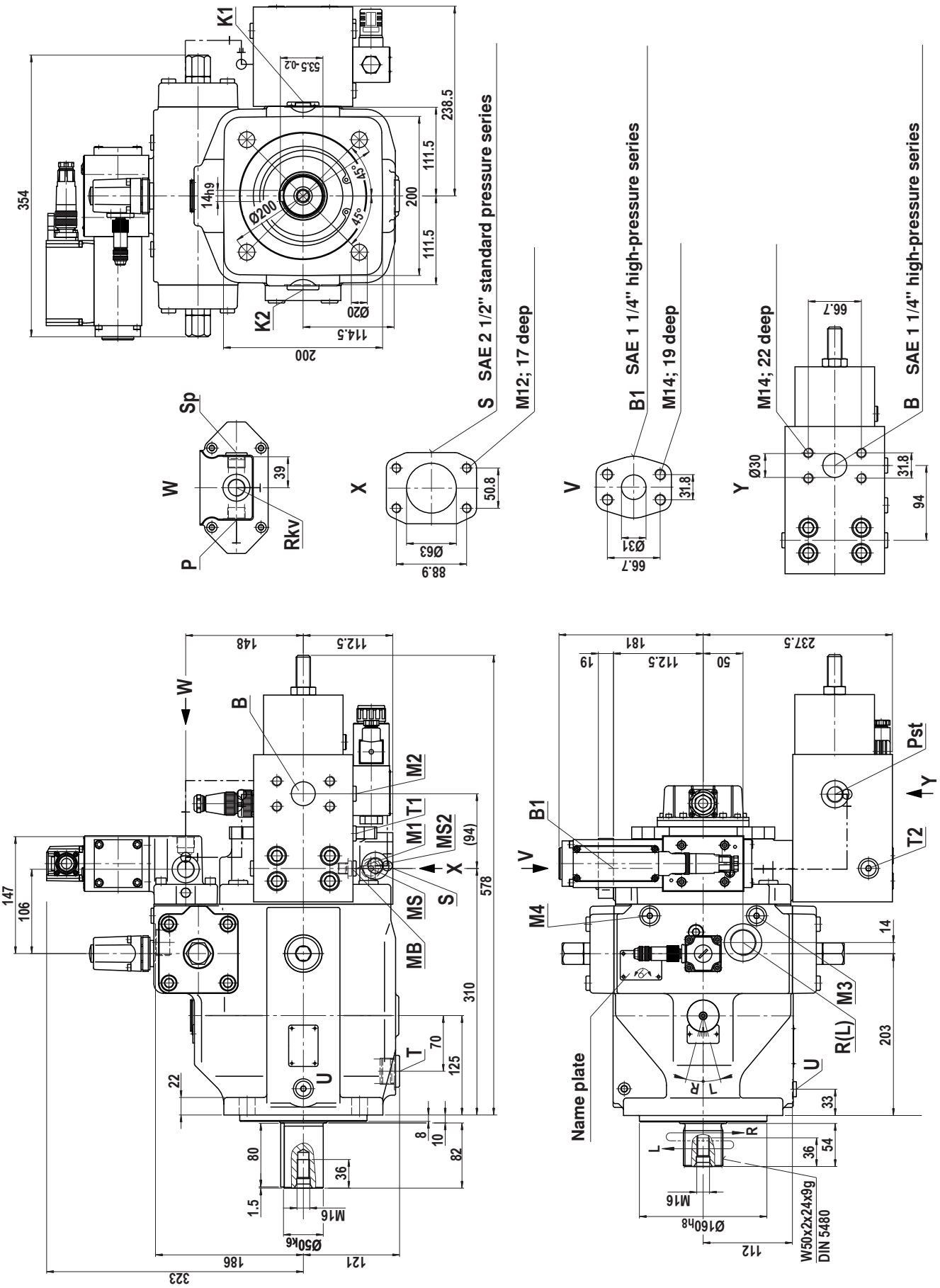

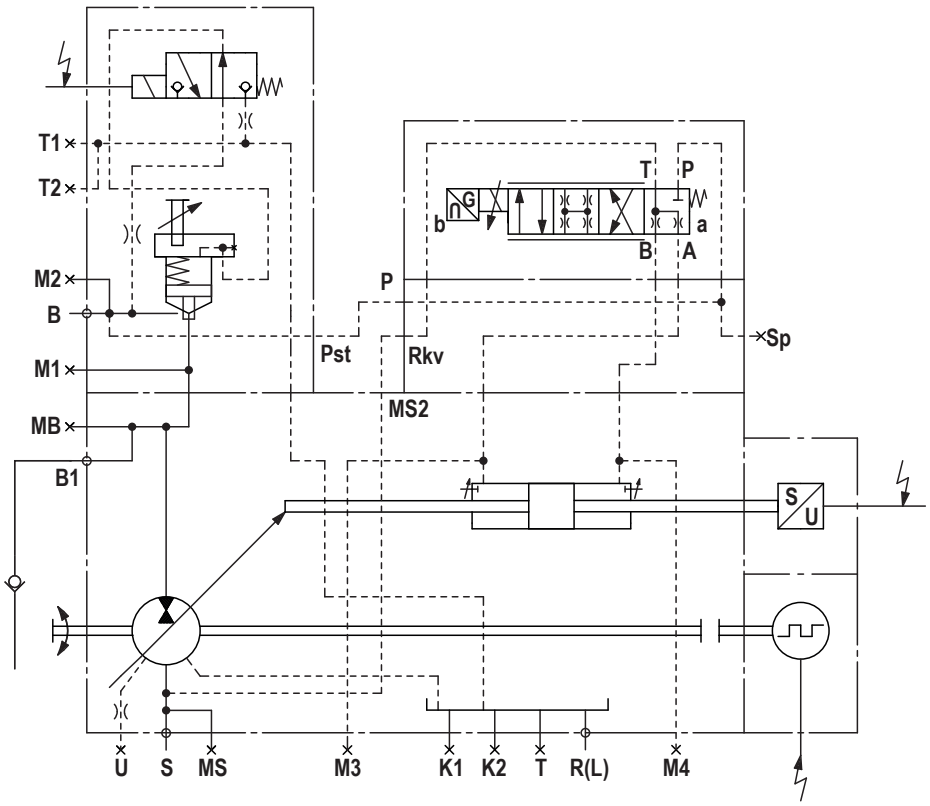

Designation of the ports

B	Pressure port	SAE 1 1/4"
B1	Additional pressure port	SAE 1 1/4"
S	Suction port	SAE 2 1/2"
K1, K2	Flushing port	M33x2
MB	Measuring port operating pressure	M14x1.5
MS	Measuring port suction pressure	M14x1.5
M1, M2	Measuring port operating pressure	G 1/4
M3, M4	Measuring port actuating pressure	M14x1.5
Sp	External control pressure port	M22x1.5
R(L)	Fluid filling and bleeding	M33x2
T	Fluid drain	M33x2
T1, T2	Leaking fluid/bleeding	G 1/4
U	Flushing port (bearing flushing)	M14x1.5
RKV	Pilot fluid return (piped)	M22x1.5
MS2	Pilot fluid return (piped)	G 1/2
P	Control pressure port (piped)	M22x1.5
Pst	Control pressure port (piped)	G 1/2

Device dimensions / circuit diagram: A4VSO180DS2R/3XW–..B25T031N (in mm)

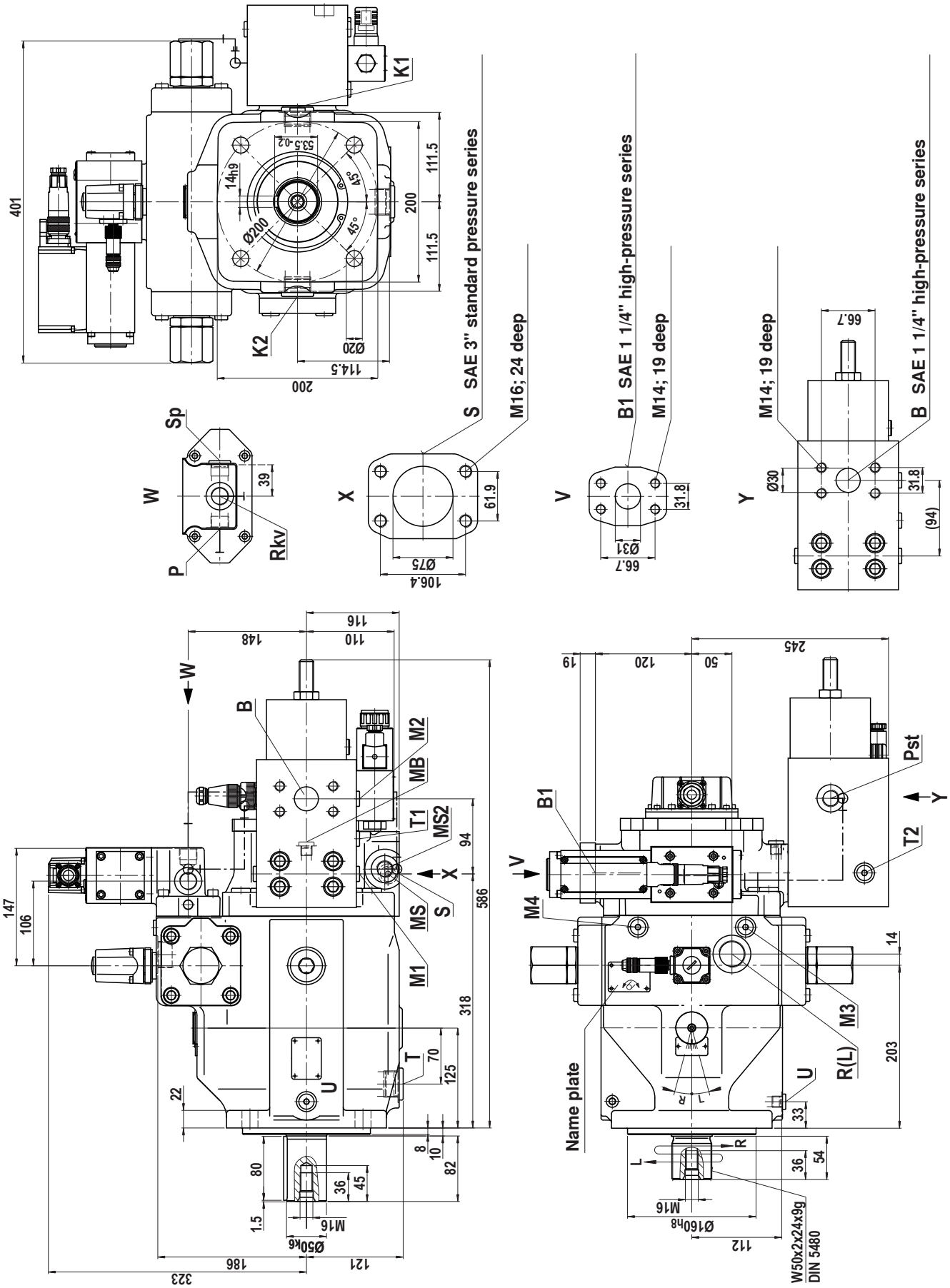

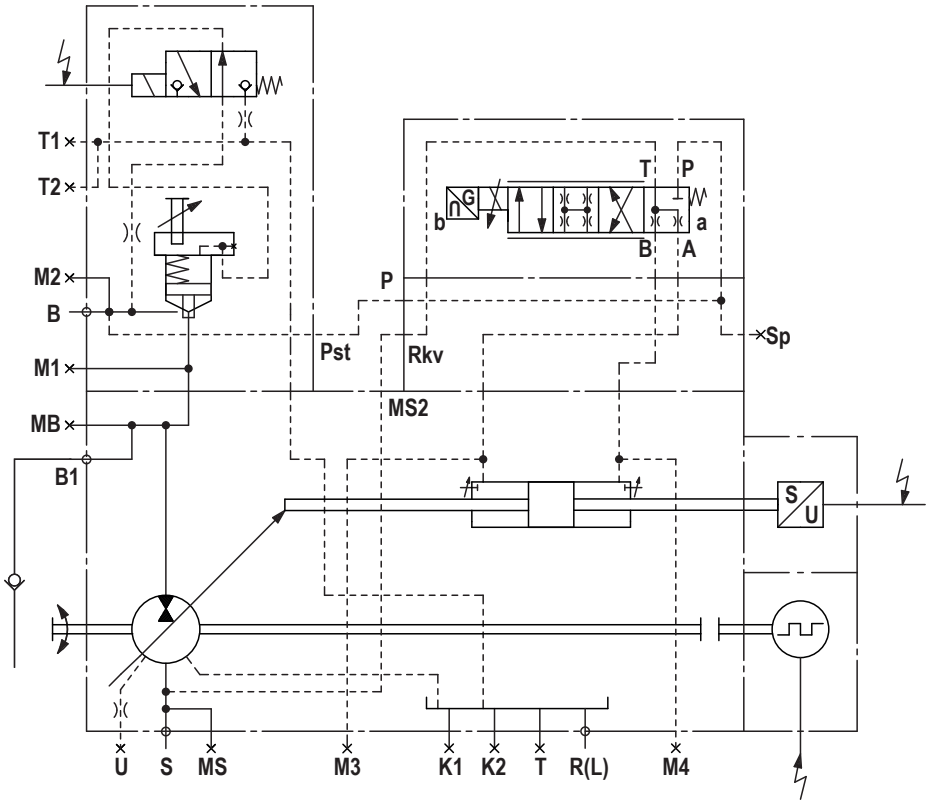

Designation of the ports

B	Pressure port	SAE 1 1/4"
B1	Additional pressure port	SAE 1 1/4"
S	Suction port	SAE 3"
K1, K2	Flushing port	M33x2
MB	Measuring port operating pressure	M14x1.5
MS	Measuring port suction pressure	M14x1.5
M1, M2	Measuring port operating pressure	G 1/4
M3, M4	Measuring port actuating pressure	M14x1.5
Sp	External control pressure port	M22x1.5
R(L)	Fluid filling and bleeding	M33x2
T	Fluid drain	M33x2
T1, T2	Leaking fluid/bleeding	G 1/4
U	Flushing port (bearing flushing)	M14x1.5
RKV	Pilot fluid return (piped)	M22x1.5
MS2	Pilot fluid return (piped)	G 1/2
P	Control pressure port (piped)	M22x1.5
Pst	Control pressure port (piped)	G 1/2

Device dimensions / circuit diagram: A4VSO250DS2R/3XW–..B25T031N (in mm)

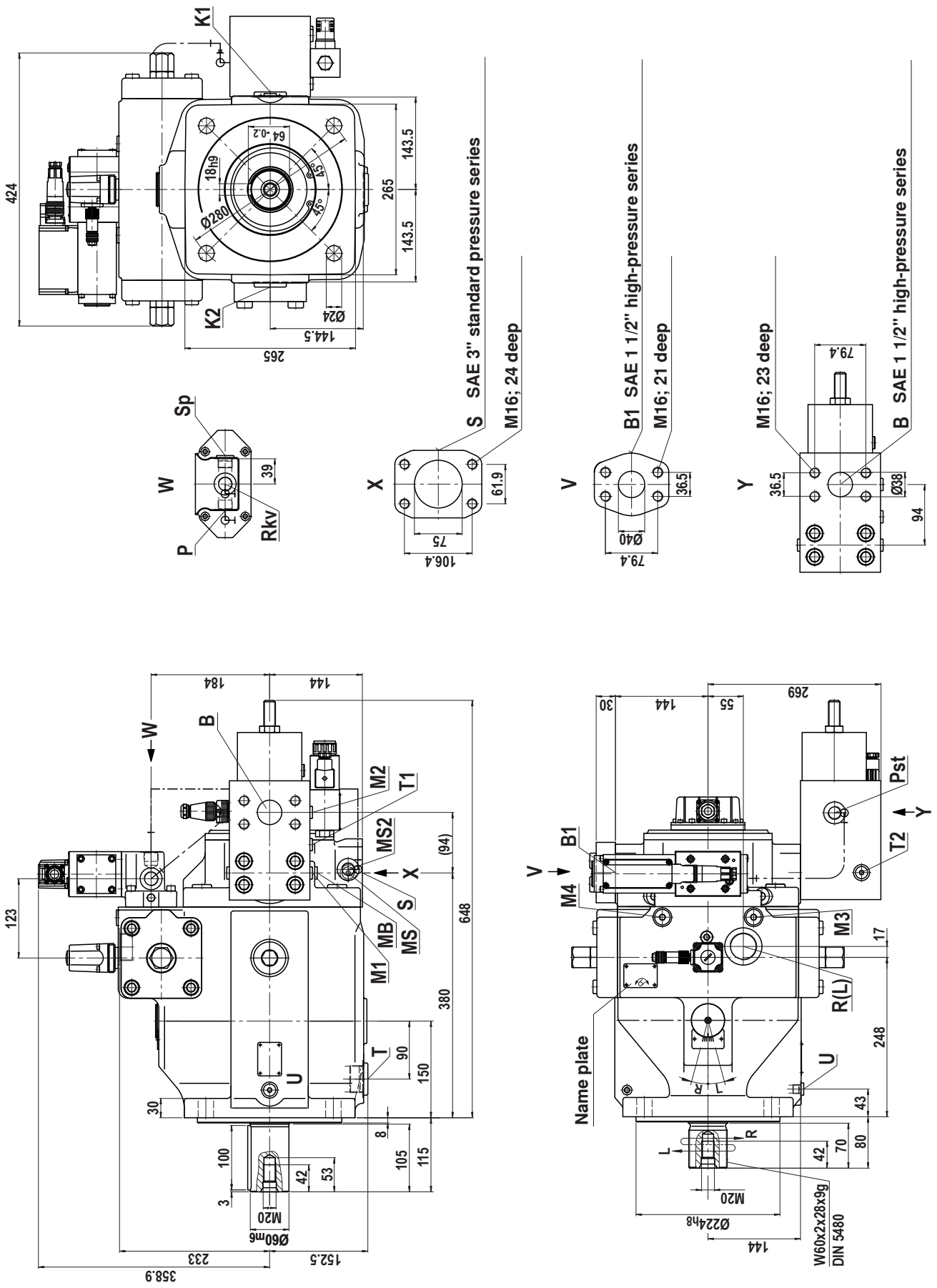

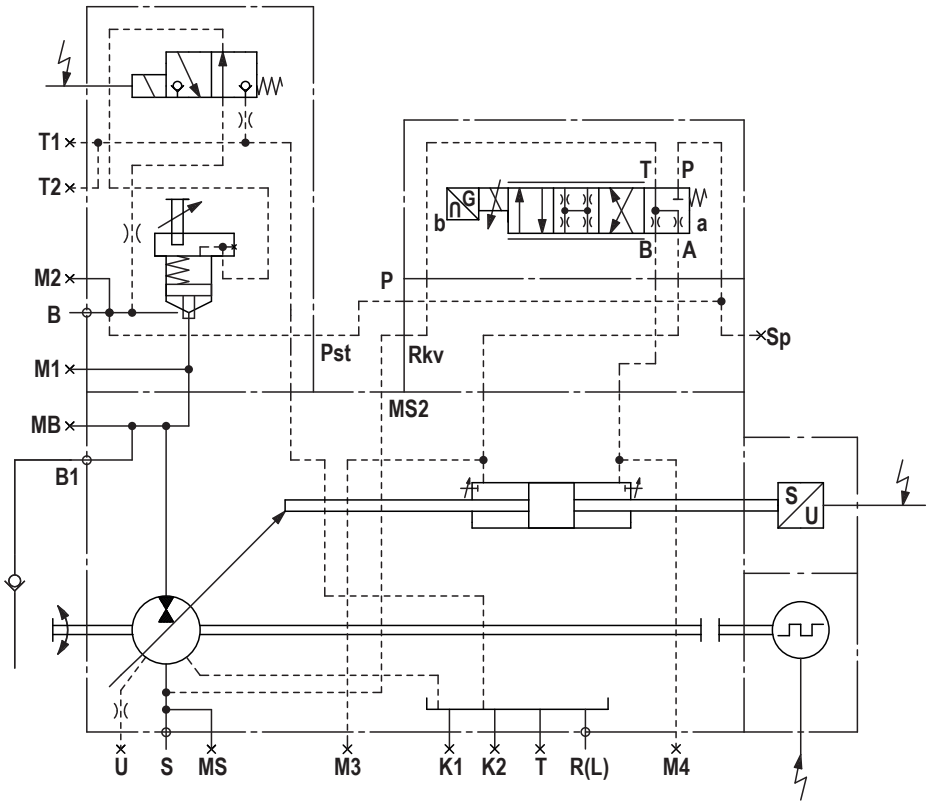

Designation of the ports

B	Pressure port	SAE 1 1/2"
B1	Additional pressure port	SAE 1 1/2"
S	Suction port	SAE 3"
K1, K2	Flushing port	M42x2
MB	Measuring port operating pressure	M14x1.5
MS	Measuring port suction pressure	M14x1.5
M1, M2	Measuring port operating pressure	G 1/4
M3, M4	Measuring port actuating pressure	M18x1.5
Sp	External control pressure port	M22x1.5
R(L)	Fluid filling and bleeding	M42x2
T	Fluid drain	M42x2
T1, T2	Leaking fluid/bleeding	G 1/4
U	Flushing port (bearing flushing)	M14x1.5
RKV	Pilot fluid return (piped)	M22x1.5
MS2	Pilot fluid return (piped)	G 1/2
P	Control pressure port (piped)	M22x1.5
Pst	Control pressure port (piped)	G 1/2

Device dimensions / circuit diagram: A4VSO355DS2/3XW–..B13T031Z (in mm)

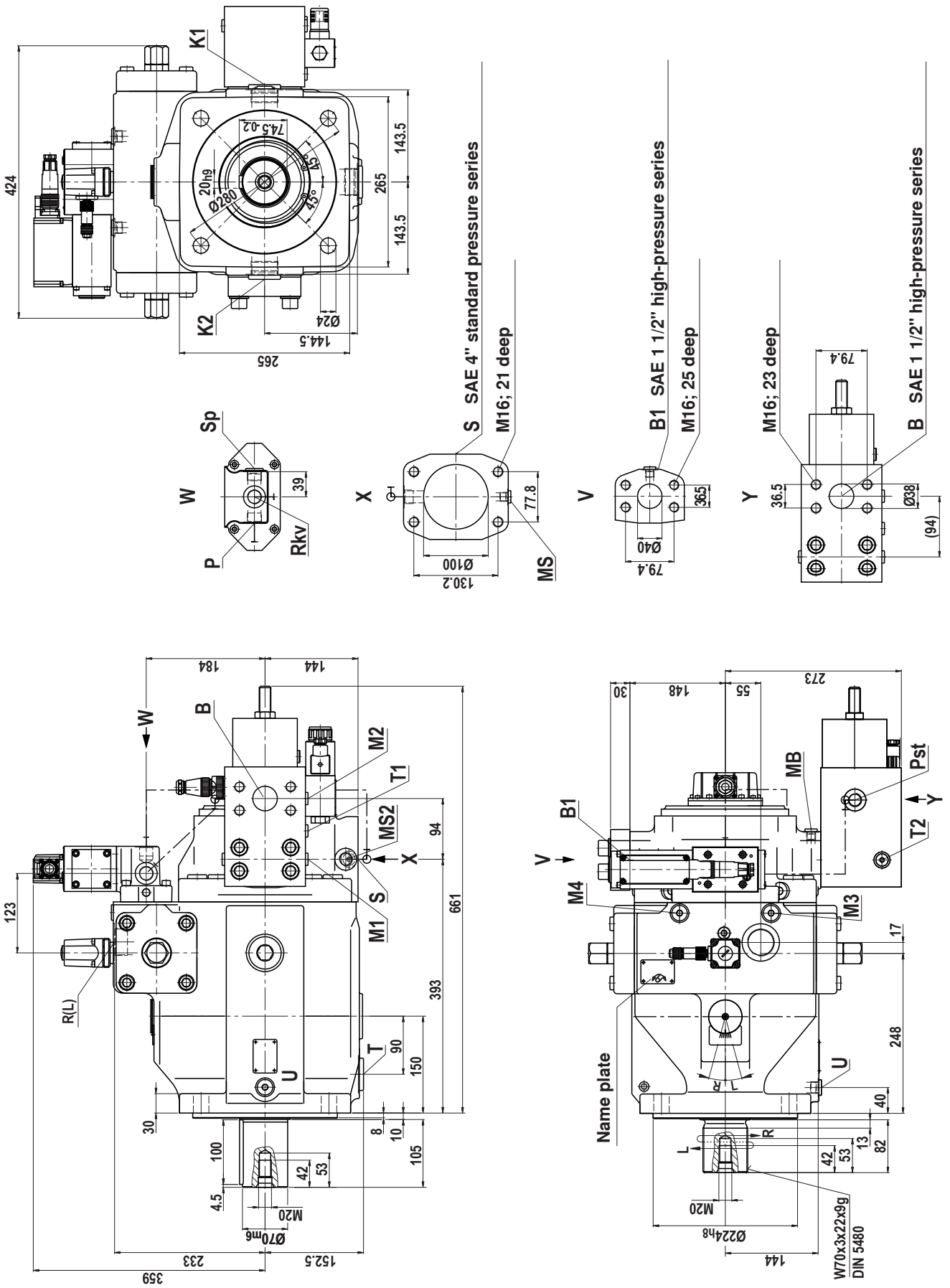

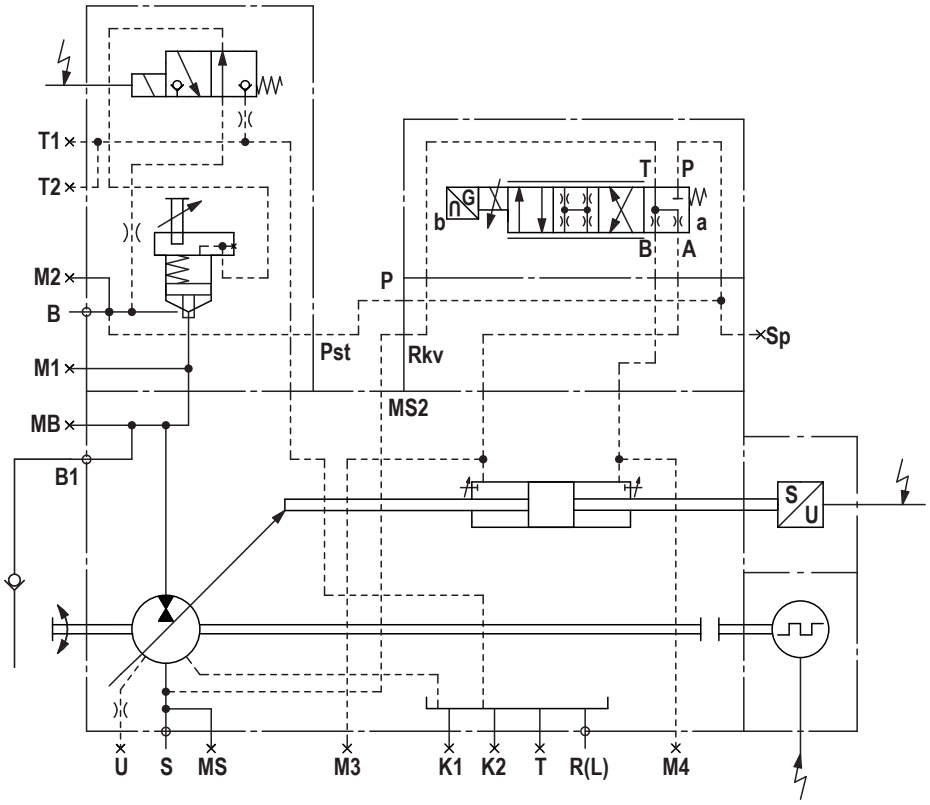

Designation of the ports

B	Pressure port	SAE 1 1/2"
B1	Additional pressure port	SAE 1 1/2"
S	Suction port	SAE 4"
K1, K2	Flushing port	M42x2
MB	Measuring port operating pressure	M14x1.5
MS	Measuring port suction pressure	M14x1.5
M1, M2	Measuring port operating pressure	G 1/4
M3, M4	Measuring port actuating pressure	M18x1.5
Sp	External control pressure port	M22x1.5
R(L)	Fluid filling and bleeding	M42x2
T	Fluid drain	M42x2
T1, T2	Leaking fluid/bleeding	G 1/4
U	Flushing port (bearing flushing)	M18x1.5
RKV	Pilot fluid return (piped)	M22x1.5
MS2	Pilot fluid return (piped)	G 1/2
P	Control pressure port (piped)	M22x1.5
Pst	Control pressure port (piped)	G 1/2

Device dimensions / circuit diagram: A4VSO500DS2R/3XW–..H25T031N (in mm)

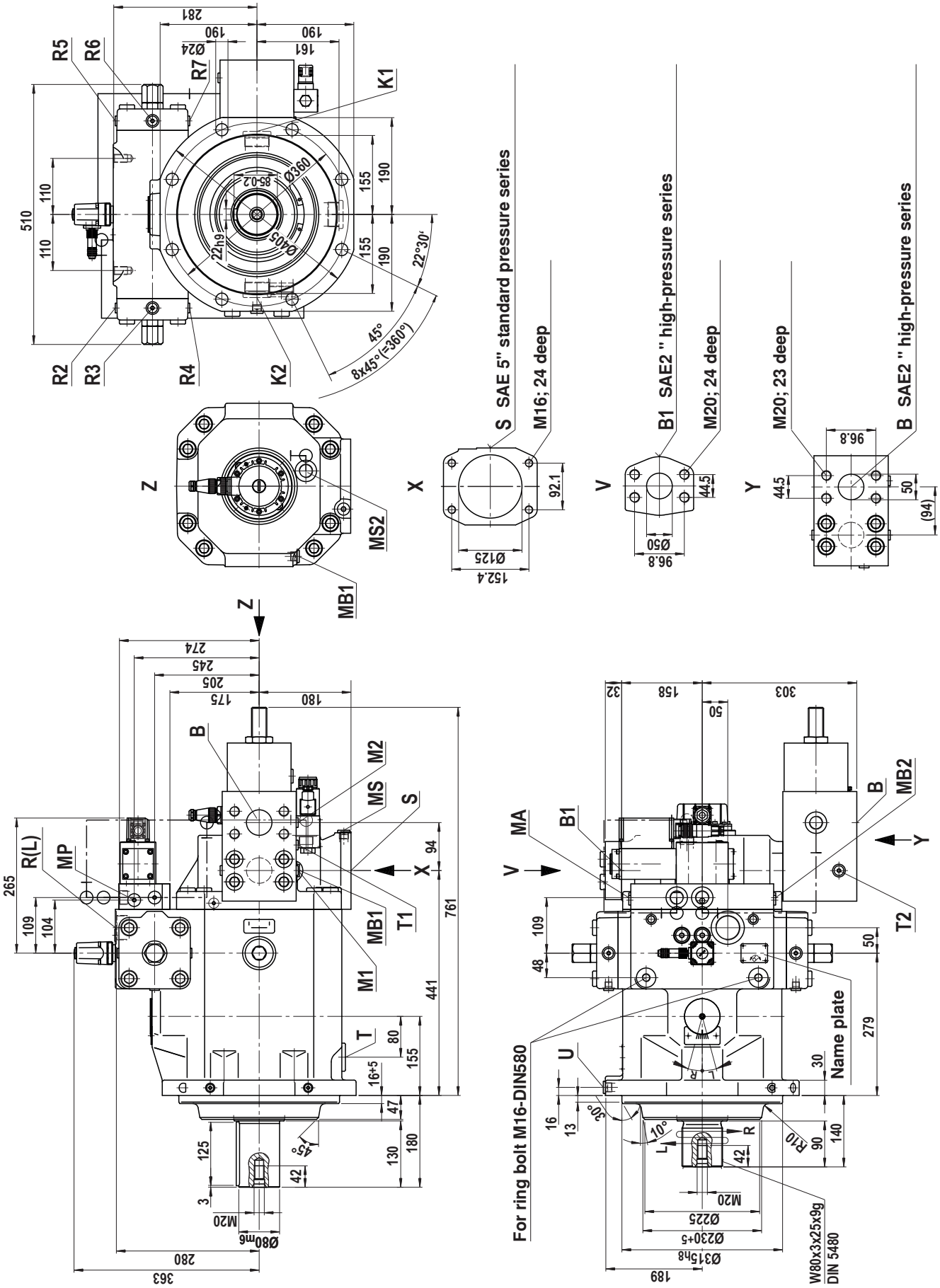

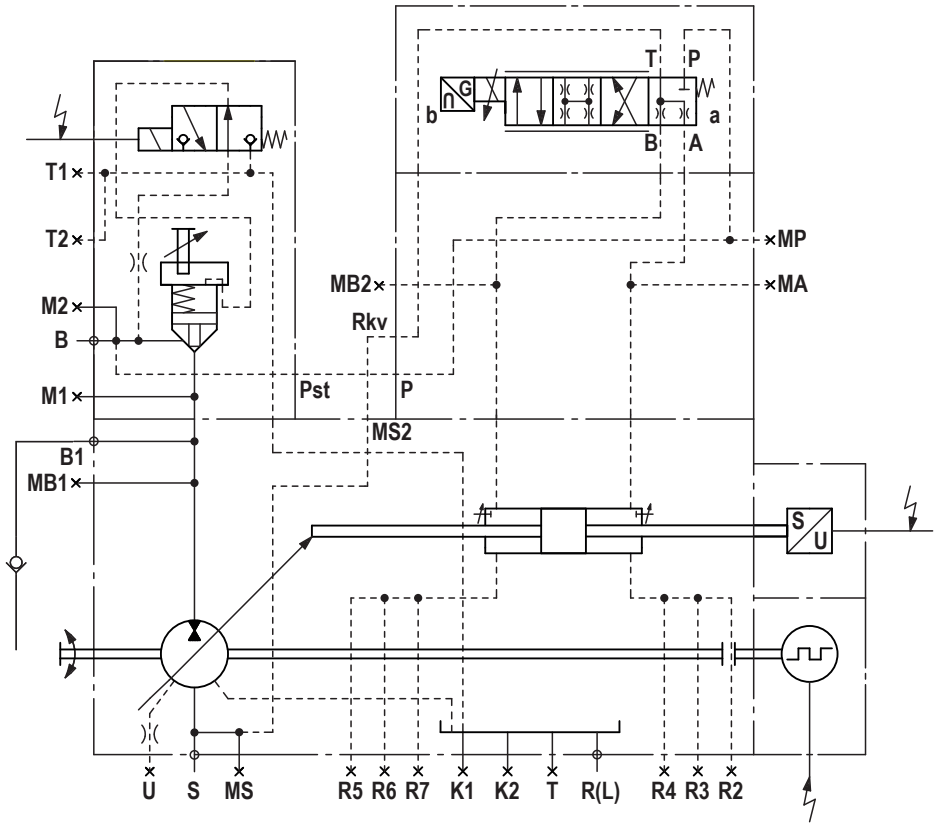

Designation of the ports

B	Pressure port	SAE 2"
B1	Additional pressure port	SAE 2"
S	Suction port	SAE 5"
K1, K2	Flushing port	M48x2
MB1	Measuring port operating pressure	M18x1.5
MA, MB2	Measuring port actuating pressure	M14x1.5
MS	Measuring port suction pressure	M18x1.5
M1, M2	Measuring port operating pressure	G 1/4
MP	External control pressure port	M14x1.5
R(L)	Fluid filling and bleeding	M48x2
R2-R7	Bleeding adjustment	M4x1.5
T	Fluid drain	M48x2
T1, T2	Leaking fluid/bleeding	G 1/4
U	Flushing port (bearing flushing)	M18x1.5
RKV	Pilot fluid return (piped)	M27x2
MS2	Pilot fluid return (piped)	M27x2
P	Control pressure port (piped)	M27x2
Pst	Control pressure port (piped)	G 3/4

Device dimensions / **circuit diagram:** A4VSO750DS2/3XW–..H13T031Z (in mm)

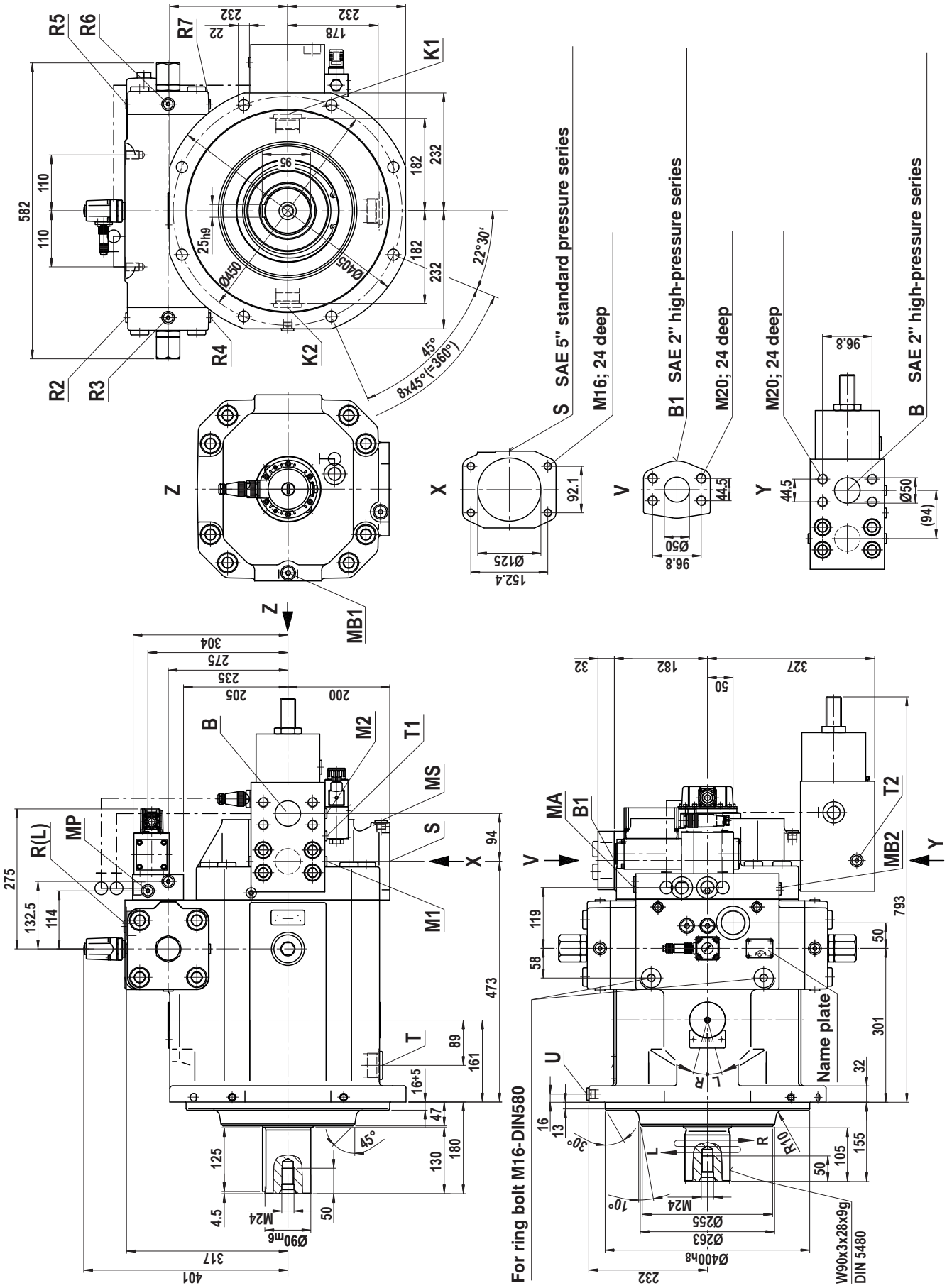

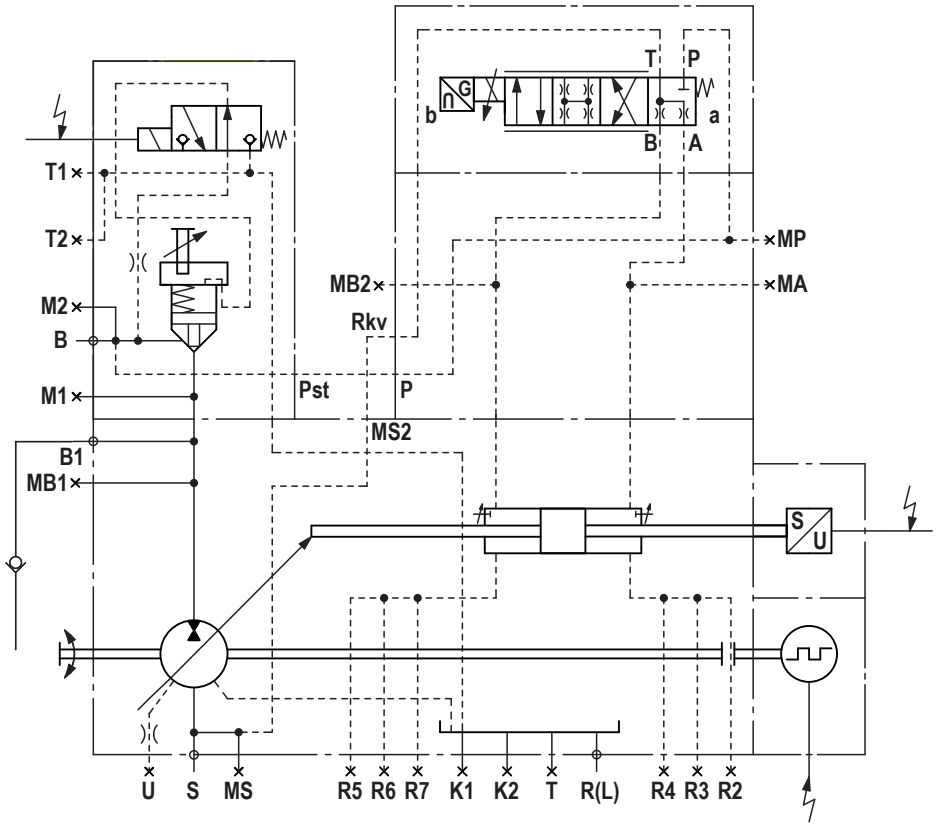

Designation of the ports

B	Pressure port	SAE 2"
B1	Additional pressure port	SAE 2"
S	Suction port	SAE 5"
K1, K2	Flushing port	M48x2
MB1	Measuring port operating pressure	M18x1.5
MA, MB2	Measuring port actuating pressure	M14x1.5
MS	Measuring port suction pressure	M18x1.5
M1, M2	Measuring port operating pressure	G 1/4
MP	External control pressure port	M14x1.5
R(L)	Fluid filling and bleeding	M48x2
R2-R7	Bleeding adjustment	M4x1.5
T	Fluid drain	M48x2
T1, T2	Leaking fluid/bleeding	G 1/4
U	Flushing port (bearing flushing)	M18x1.5
RKV	Pilot fluid return (piped)	M27x2
MS2	Pilot fluid return (piped)	M27x2
P	Control pressure port (piped)	M27x2
Pst	Control pressure port (piped)	G 3/4

Device dimensions / circuit diagram: A4VSO1000DS2R/3XW–..H25T031N (in mm)

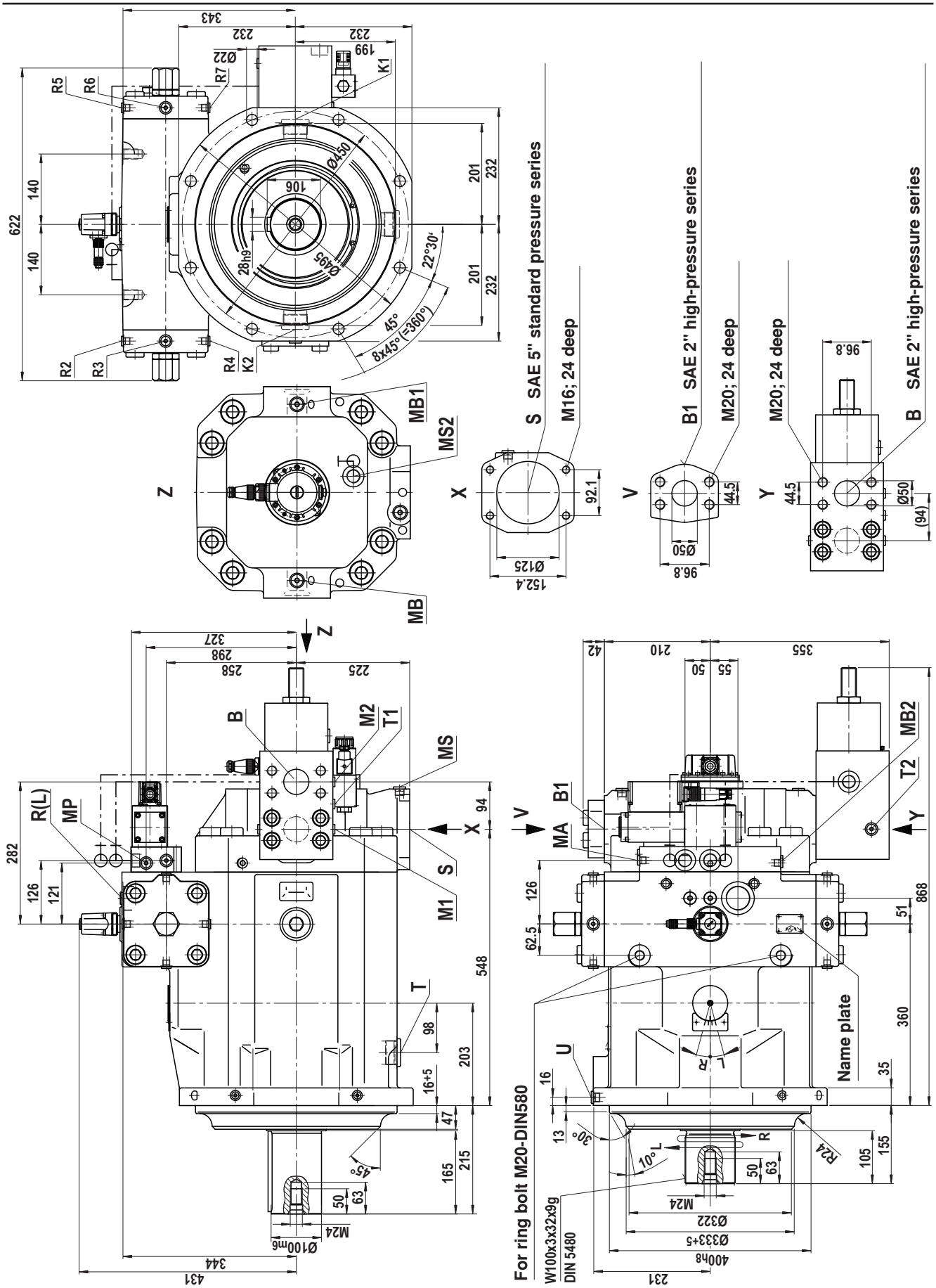

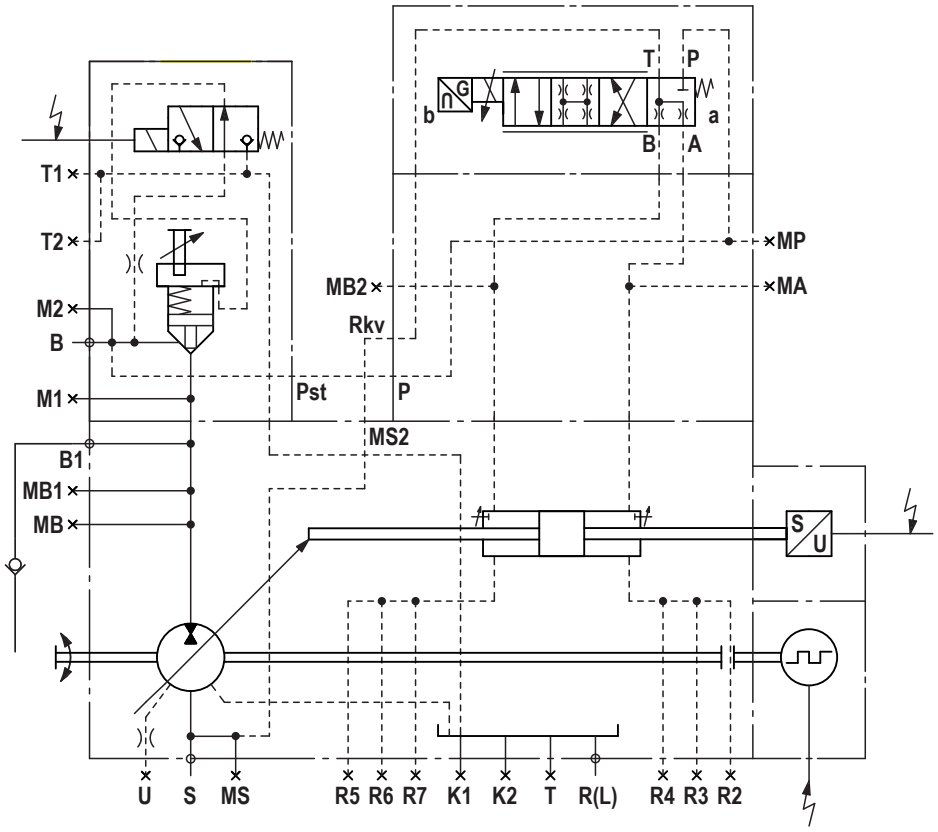

Designation of the ports

B	Pressure port	SAE 2"
B1	Additional pressure port	SAE 2"
S	Suction port	SAE 5"
K1, K2	Flushing port	M48x2
MB, MB1	Measuring port operating pressure	M18x1.5
MA, MB2	Measuring port actuating pressure	M14x1.5
MS	Measuring port suction pressure	M18x1.5
M1, M2	Measuring port operating pressure	G 1/4
MP	External control pressure port	M14x1.5
R(L)	Fluid filling and bleeding	M48x2
R2-R7	Bleeding adjustment	M4x1.5
T	Fluid drain	M48x2
T1, T2	Leaking fluid/bleeding	G 1/4
U	Flushing port (bearing flushing)	M18x1.5
RKV	Pilot fluid return (piped)	M27x2
MS2	Pilot fluid return (piped)	M27x2
P	Control pressure port (piped)	M27x2
Pst	Control pressure port (piped)	G 3/4

Closed-loop speed control DS2R

With closed-loop speed control, the swivel angle and thus the stroke volume of the axial piston unit are changed with constant operating pressure using the DS2 adjustment device until the torque required to maintain the specified speed has been built up.

In a supply network with constant operating pressure, the torque is proportional to the swivel angle and/or to the stroke volume of the axial piston unit. The stroke volume is recorded by an inductive position transducer, the speed by an incremental rotary encoder.

The stroke volume is adjusted by means of a high-response valve. With higher requirements on the dynamics of the drive system, the high-response valve can be replaced by a servo valve.

In case of emergency shut-off, the electrically releasable check valve RVE (hydraulic connector) at the pressure port is brought into blocked position. This interrupts the energy supply to the secondary unit; only generator-based braking with energy recovery to the hydraulic network is then possible.

So that in case of an emergency stop signal, the coastdown or rundown of the axial piston unit does not cause cavitation damage, anti-cavitation valves are to be provided which have to be freely piped at port B1. These check valves without spring are to be installed vertically and have to be ordered separately.

The following pages describe the following:

- Incremental encoder GEL 293 to record the speed
- Inductive position transducer AWXF to record the swivel angle
- Electrically releasable check valve RVE A4VS
- Anti-cavitation valve S...A
- Digital controller assembly SYHNC100-SEK

Incremental encoder GEL 293

Ordering code 12 = "T03" or "T04"

Technical data

Resolution	Ordering code 12 = "T03"		1000 increments/rotation
	Ordering code 12 = "T04"		2500 increments/rotation
Protection class according to EN 60529			IP 66 with mating connector mounted and locked
Power consumption: $R_L = \infty$; $U_B = 5$ V		W	≤ 1.0
Ambient temperature range		°C	–20 to +80

Signal pattern T

Supply voltage U_S = 5 V ± 5 %; signal voltage U_{Si} = 5 V

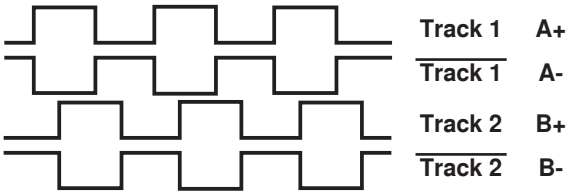

Signal pattern rotating clockwise when looking at the shaft

Electrical connection

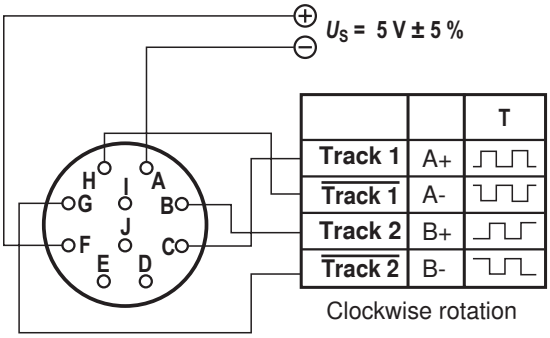

Clockwise rotation

Maximum cable lengths

Between incremental encoder and downstream electronics:
Ground the cable shield on one side at the receiver. The specified data are guidelines and refer to the cable type LiYCY 6 (10) x 0.25 mm².

f [kHz]	5	10	20	50	100	200
l_{max} [m]	200	200	200	200	145	72

Device dimensions (in mm)

The mating connector is included in the scope of delivery.

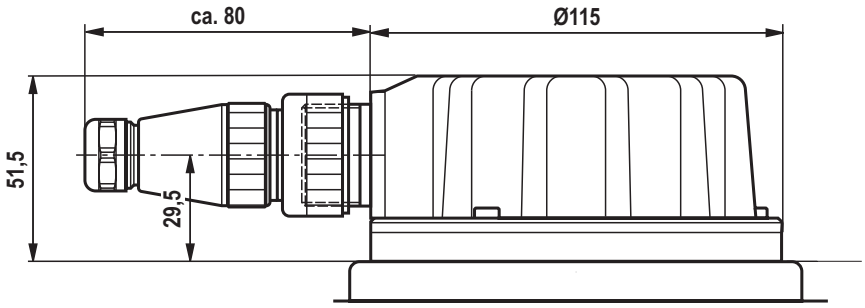

Use of other speed recording systems is not possible. In this case, please contact us at the following email address: application-centre@boschrexroth.de

Swivel angle sensor AWXF

Technical data

Measurement system			Differential transformer
Control stroke			±4.5 mm
Linearity tolerance		%	≤ 1.0
Carrier frequency		kHz	5
Coil resistance (at 20 °C)	Primary coil	Ω	120
	Per secondary coil	Ω	280
Electrical connection			Plug-in connection M12 x 1, 4-pin
Protection class of the plug-in connection according to EN 60529			IP 67 with mating connector mounted and locked
Ambient temperature range		°C	–20 to +80

Electrical connection

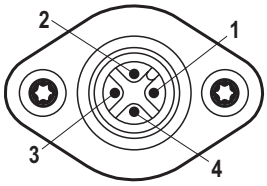

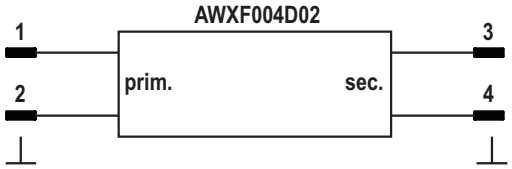

Device dimensions (in mm)

The mating connector is included in the scope of delivery.

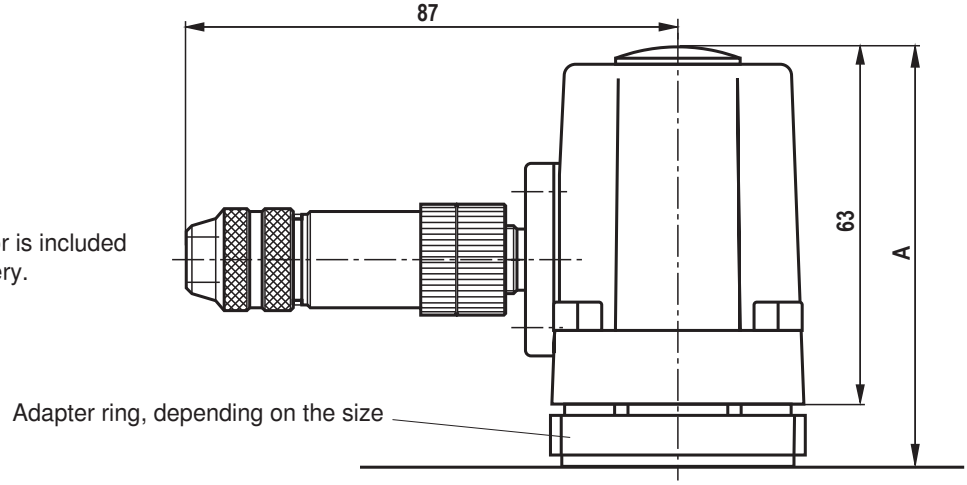

	Size 40	Size 71	Size 125	Size 180	Size 250	Size 355	Size 500	Size 750	Size 1000
A	86	90	86	86	81	81	81	81	81

Electrically releasable check valve RVE A4VS

Ordering code 13 = "1"

Technical data

electrical (confer directional seat valve M–3SED6, data sheet 22049)

Direct voltage	V	24
Power consumption	W	30
Duty cycle		Continuous operation
Protection class according to EN 60529		IP 67 with mating connector mounted and locked

hydraulic (confer cartridge valves type LC.., data sheet 21010)

Size	Logic element	Installed in the housing	Max. flow q_{Vmax} in l/min with a pressure drop of 5 bar
40	LC16B40D-7X/	AGEV4-05701-AB/46	200
71	LC25B40D-7X/	AGEV4-05702-AB/46	400
125	LC32B40D-7X/	AGEV4-05703-AB/46	700
180	LC32B40D-7X/	AGEV4-05703-AB/46	700
250	LC32B40D-7X/	AGEV4-05704-AB/46	700
355	LC32B40D-7X/	AGEV4-05704-AB/46	700
500	LC40B40D-7X/	AGEV4-05705-AB/46	1200
750	LC40B40D-7X/	AGEV4-05705-AB/46	1200
1000	LC40B40D-7X/	AGEV4-05705-AB/46	1200

Anti-cavitation valve S...A

Separate order (selection according to the following table)

Ordering code

	Anti-cavitation valve	
For A4VSO, size	without feed-in	with feed-in
40	S10A0.0	S10A1.0
71	S15A0.0	S15A1.0
125	S20A0.0	S20A1.0
180	S20A0.0	S20A1.0
250	S25A0.0	S25A1.0
355	S25A0.0	S25A1.0
500	S30A0.0	S30A1.0
750	S30A0.0	S30A1.0
1000	S30A0.0	S30A1.0

Notice: These anti-cavitation valves are piped at port B1.

For details on the anti-cavitation valves refer to data sheet 20375.

Digital controller assembly SYHNC100-SEK-...-3X

Separate order (selection according to data sheet 30162)

Features

The SYHNC100-SEK-...-3X digital controller assembly is suitable for the closed-loop speed control, the closed-loop torque control as well as the open-loop torque control of secondary controlled axial piston units type A4VS..DS2(E).

It comprises interfaces for recording the swivel angle position of individual or tandem units as well as for the speed feedback with incremental encoders. The software contains closed-loop control, open-loop control and monitoring functions especially designed for the secondary control.

Other features:

- Up to 2 modules for the analysis of the signals of up to 4 LVDT swivel angle sensors
- Up to 2 incremental encoder inputs with monitoring function for the speed recording
- Up to 8 analog inputs (voltage or current) for command value specification
- Up to 6 analog outputs to control downstream valve amplifiers
- Digital inputs and outputs for communication with a superior control system
- Profibus DP or CANopen for the communication with a superior control system
- Set-up of master/slave applications via internal CAN interface
- Assembly on top hat rail 35 mm

Software functionality

Basically, the software contains the closed-loop control types closed-loop speed control, closed-loop torque control and open-loop torque control. It is possible to switch between the closed-loop control types during operation in a shock-free form.

Configuration, parameterization and diagnosis of the SYHNC100-SEK-...-3X by means of the WIN-PED PC program. Only the "WIN-PED 6.6" version is used. It can be downloaded free of charge on the Internet at www.boschrexroth.com/hnc100.

System-specific software extensions can be prepared upon request.

Monitoring functions

- Cable break monitoring for incremental and SSI encoder
- Cable break monitoring for swivel angle sensors
- Acceleration too high
- Overspeed (max. speed)
- Speed difference command / actual
- Swivel angle difference command / actual

More information

Data sheet 30162 "Digital controller assembly HNC100-SEK for the secondary control of axial piston units, type SYHNC100-SEK

Information on the system set-up

For the secondary unit with ordering code 04 = "DS2R" (with high-response valve), the following is required in addition and not included in the scope of delivery:

- Digital controller assembly SYHNC100-SEK-...-3X according to data sheet 30162
- Amplifier VT-VRRA 1-527-20/V0 according to data sheet 30041(for A4VS sizes 40 and 71)
  or
  Amplifier VT-VRRA 1-537-20/V0 according to data sheet 30041(for A4VS sizes 125 to 1000)
- Card holder VT3002-1-2X/32F, Material number 1834486001, according to data sheet 29928

Bosch Rexroth AG
Hydraulics
Zum Eisengießer 1
97816 Lohr am Main, Germany
Phone +49 (0) 93 52 / 18-0
documentation@boschrexroth.de
www.boschrexroth.de

© This document, as well as the data, specifications and other information set forth in it, are the exclusive property of Bosch Rexroth AG. It may not be reproduced or given to third parties without its consent.
The data specified above only serve to describe the product. No statements concerning a certain condition or suitability for a certain application can be derived from our information. The information given does not release the user from the obligation of own judgment and verification. It must be remembered that our products are subject to a natural process of wear and aging.

Notes

Bosch Rexroth AG
Hydraulics
Zum Eisengießer 1
97816 Lohr am Main, Germany
Phone +49 (0) 93 52 / 18-0
documentation@boschrexroth.de
www.boschrexroth.de

© This document, as well as the data, specifications and other information set forth in it, are the exclusive property of Bosch Rexroth AG. It may not be reproduced or given to third parties without its consent.
The data specified above only serve to describe the product. No statements concerning a certain condition or suitability for a certain application can be derived from our information. The information given does not release the user from the obligation of own judgment and verification. It must be remembered that our products are subject to a natural process of wear and aging.

Notes

Bosch Rexroth AG
Hydraulics
Zum Eisengießer 1
97816 Lohr am Main, Germany
Phone +49 (0) 93 52 / 18-0
documentation@boschrexroth.de
www.boschrexroth.de

© This document, as well as the data, specifications and other information set forth in it, are the exclusive property of Bosch Rexroth AG. It may not be reproduced or given to third parties without its consent.
The data specified above only serve to describe the product. No statements concerning a certain condition or suitability for a certain application can be derived from our information. The information given does not release the user from the obligation of own judgment and verification. It must be remembered that our products are subject to a natural process of wear and aging.